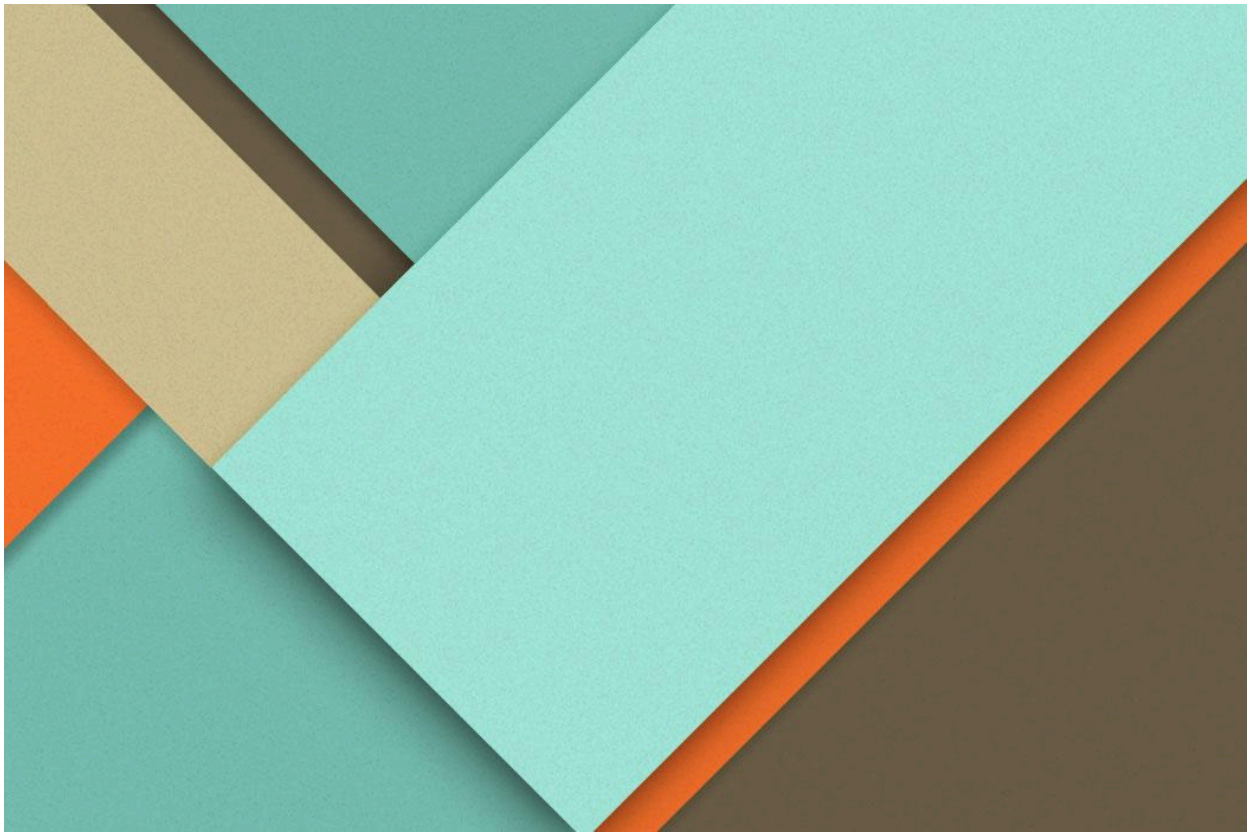

SIT315

M1.T1D

—

Abhishek Mohindra
2410994755
B.E. Software Engineering
Group X

Reflection Report

In this part of the task, I will be reflecting on what I achieved in this task and how I chose the iterative process to go from 1 star task to 4 stars task.

⭐:

For the 1 star task, I added a single PIR motion sensor and a single LED and the target was to achieve polling and trigger the LED whenever motion is detected and it worked as expected.

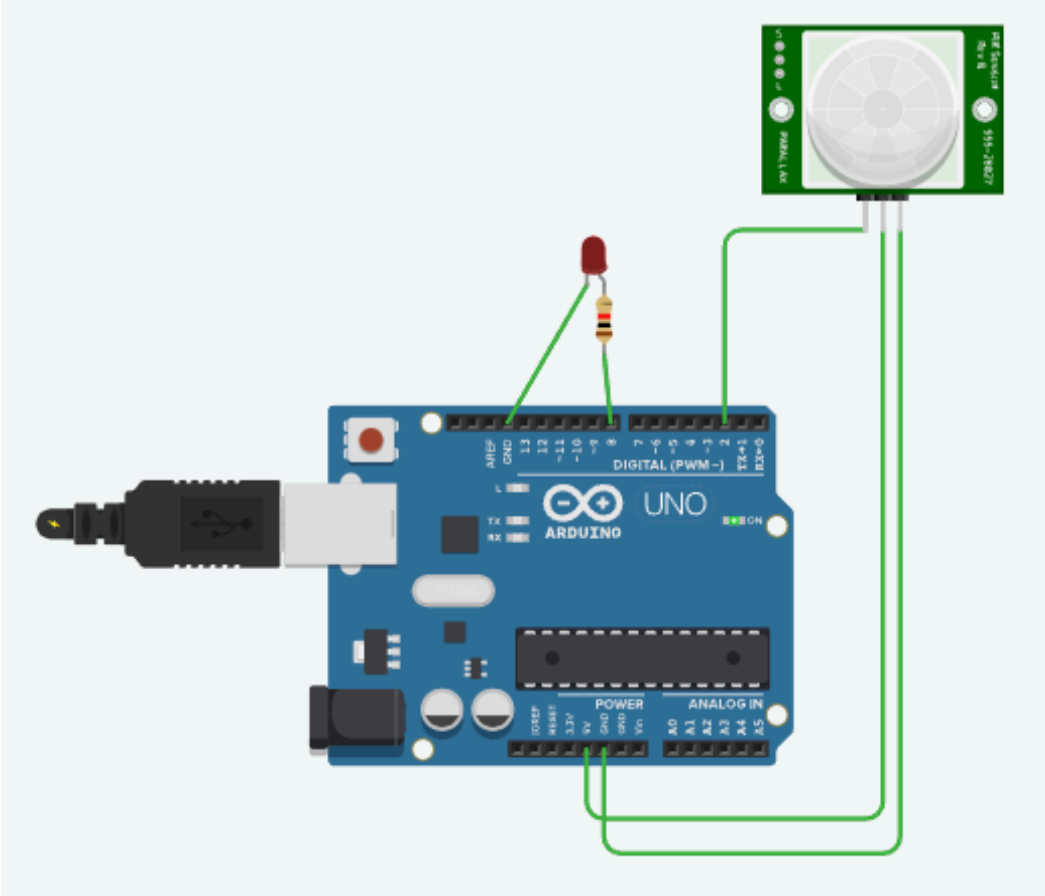

TinkerCad Link:

https://www.tinkercad.com/things/b1HAuSJ2soB-fixed-solution/editel?returnTo=https%3A%2F%2Fwww.tinkercad.com%2Fdashboard&sharecode=UFF4NC8QqQOUixc8eB7t7fHmnV1YDwXvX9enS-dy9c4

⭐⭐:

For two stars I used two sensors which were the PIR motion sensor and the Ultrasonic sensor. The aim was to implement the hardware interrupt in a way that the LED only blinks when both the sensors are triggered at the same time. After using the first interrupt pin, this outcome was easily achieved.

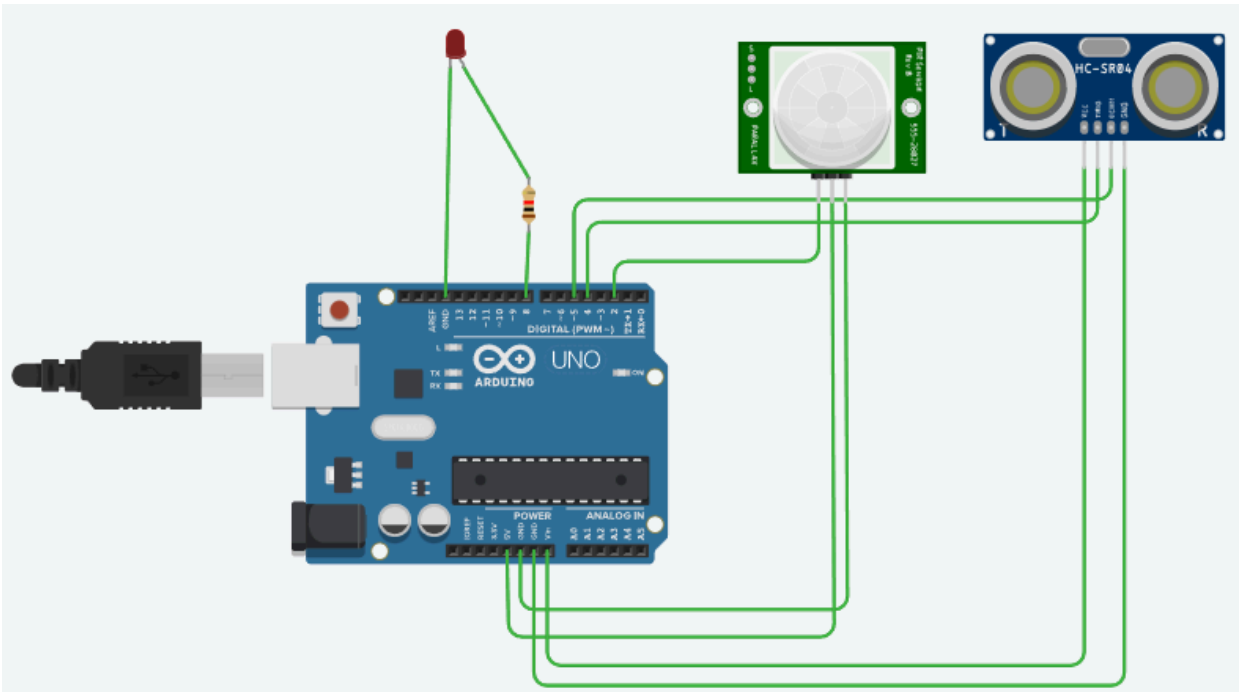

Serial Monitor:

```
Distance is: 0
Object is close and motion detected, LED ON
Distance is: 0
Object is close and motion detected, LED ON
Distance is: 0
Object is close and motion detected, LED ON
Distance is: 0
Object is close and motion detected, LED ON
Distance is: 0
Object is close and motion detected, LED ON
```

TinkerCad Link:

https://www.tinkercad.com/things/ji5PYIzYd0R-brave-duup-crift/editel?returnTo=https%3A%2F%2Fwww.tinkercad.com%2Fdashboard&sharecode=sGr1zt15UABK9oITLRUowwt_WGMVw7rExO_F1iCOTPU

⭐⭐⭐:

In the three star iteration, an additional PIR motion sensor was used other than a PIR motion sensor and an Ultrasonic sensor. The idea of this task was to implement PCI which is the Pin change interrupt. The basic idea of PCI is that while Arduino uno limits us to only 2 pins for interrupts, we might need more pins for more sensors and this is where PCI helps us in using any IO pin as an interrupt pin. This iteration was accomplished by using the PIR sensors in the same Pin group and and whenever even one of them was triggered the LED turned on showing that even the pins other than the actual hardware pins can be used for interrupts.

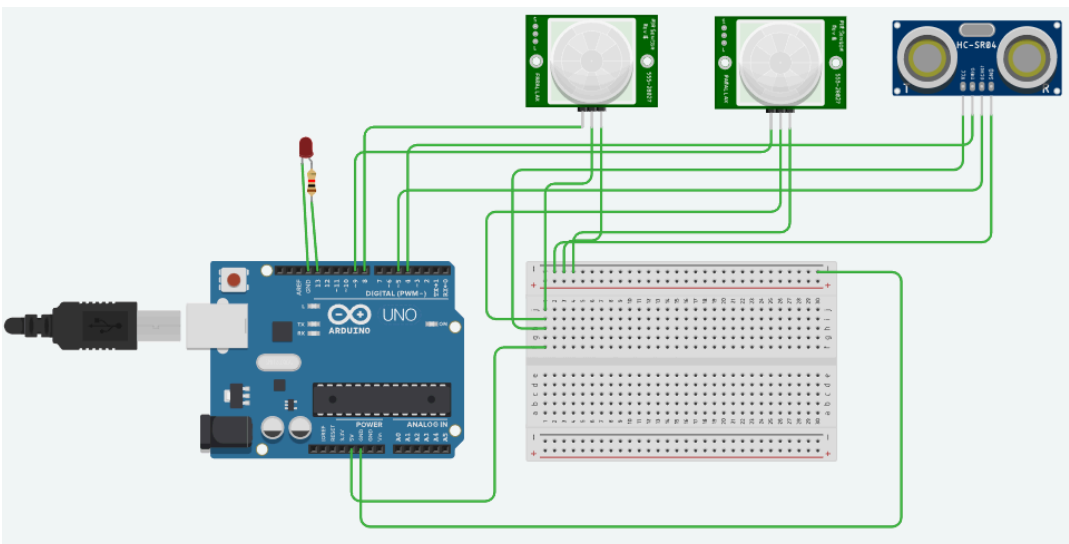

Serial Monitor:

```
Motion detected and object close LED on
Distance: 17
Motion detected and object close LED on
Distance: 17
Motion detected and object close LED on
Distance: 17
Motion detected and object close LED on
Distance: 17
Motion detected and object close LED on
Distance: 17
Motion detected and object close LED on
Distance: 17
Motion detected and object close LED on
```

TinkerCad Link:

https://www.tinkercad.com/things/lHzUDPkB1ef/editel?returnTo=%2Fdashboard&sharecode=lda3g2xus6kCoHRpx0nwX-JSENfFLTq9MPNAo5p9pp8

⭐⭐⭐⭐:

In the 4 star iteration, everything else remained the same and the only change was adding a timer interrupt. Now timer interrupt is a type of interrupt that is triggered by using time and while the Arduino does not understand time, it does understand frequency, from which it calculates time and we can use that time to change the state of a certain variable and trigger a certain response like blinking an LED without the need of loop. In this iteration, I kept everything the same as already said but added and LED that keeps blinking using the timer interrupt while all the other functionality remains the same.

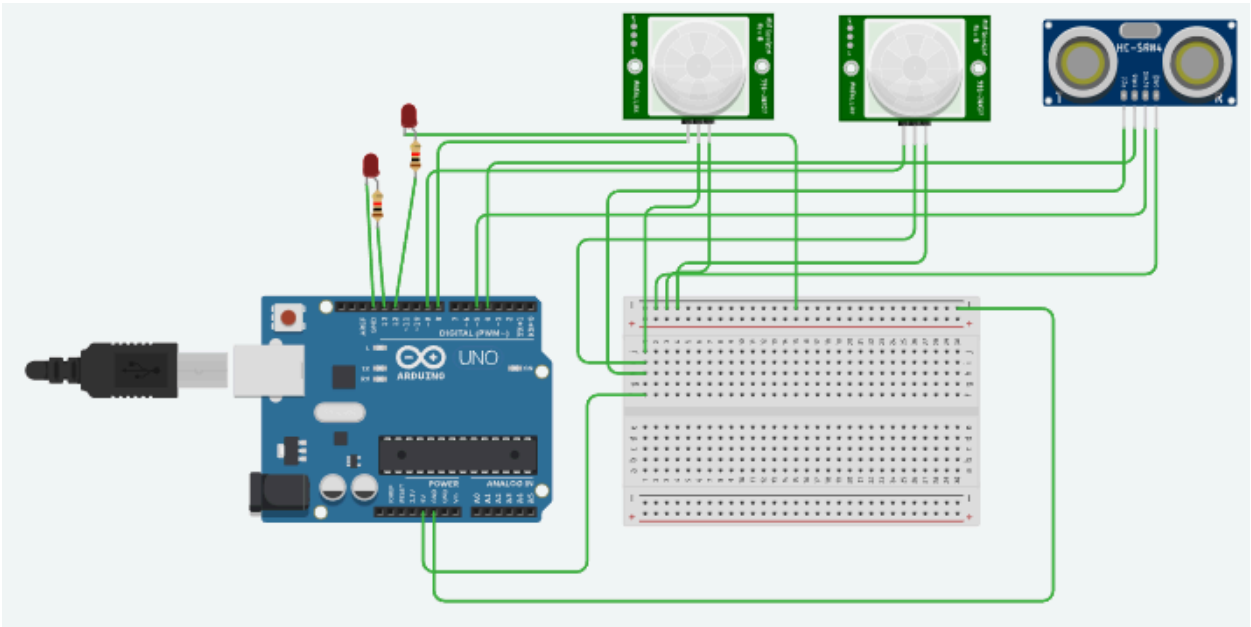

TinkerCad Link:

https://www.tinkercad.com/things/d5nDQ8MYqzZ/editel?returnTo=%2Fdashboard&sharecode=eTsi6HGxuEB5R7Edj8Kc-gbSwsQ-mKffukagzPZfM1Y

YouTube Links

1 Star: https://youtu.be/6rWsL0NpeBs

2 Star: https://youtu.be/uV4Ay1aSFpE

3 Star: https://youtu.be/C3XhwGosvcY

4 Star: https://youtu.be/W_0Xq8OeHqc